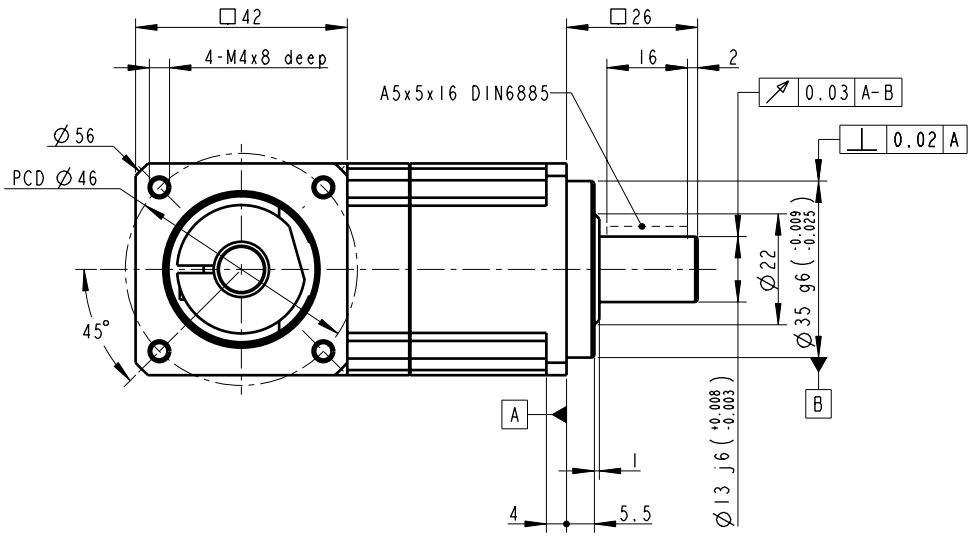

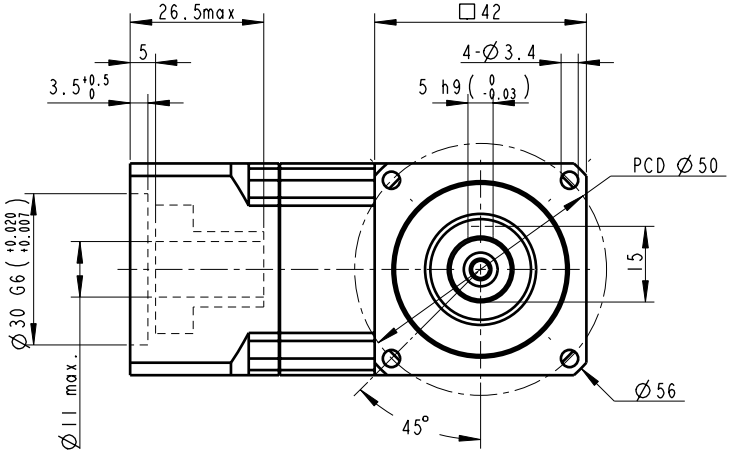

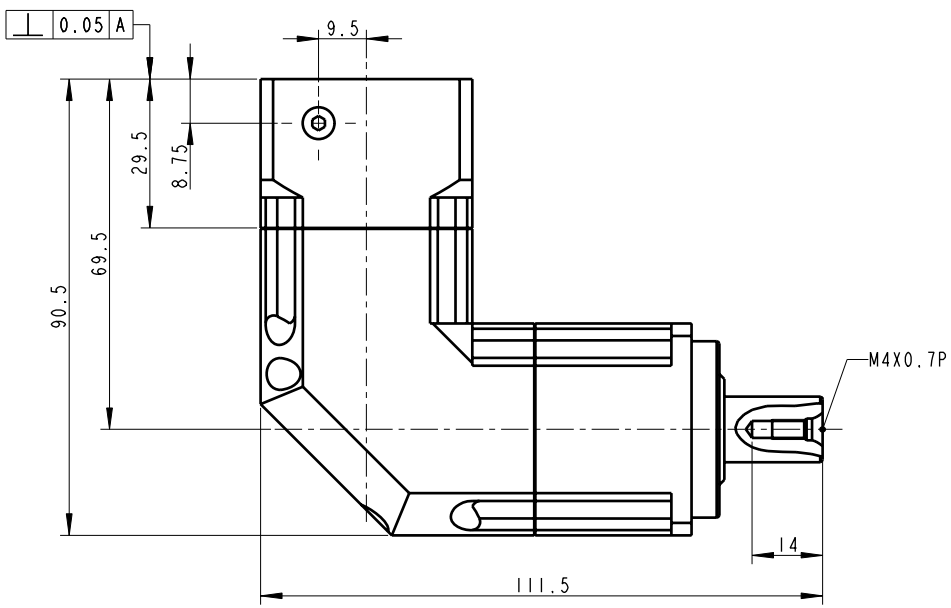

INERTIA: 0.09~0.09 kg-cm^2
MASS: 0.9 Kg

SHAFT OPTION S1: SMOOTH OUTPUT SHAFT(STANDARD)
SHAFT OPTION S2: OUTPUT SHAFT WITH KEYWAY
REDUCED BACKLASH<= 4arcmin
STANDARD BACKLASH<= 6arcmin

***BUSHING SUPPLIED WHEN MOTOR SHAFT DIAMETER SMALL THAN Ø11

PART NO. ABR0421-P4010102 ABR042-1, AD-W42-M42-2		APEX DYNAMICS, INC.
APPROVALS	DATE	TITLE ABR042 1 STAGE, RATIO= 3~10 AND STANDARD FLANGE MOUNTING
DRAWN Poppy	09-Jan-08	DWG NO. ABR0421-P4010102
CHECKED		
APPROVED		SIZE A3 / SCALE 1:1 / REV 2.0